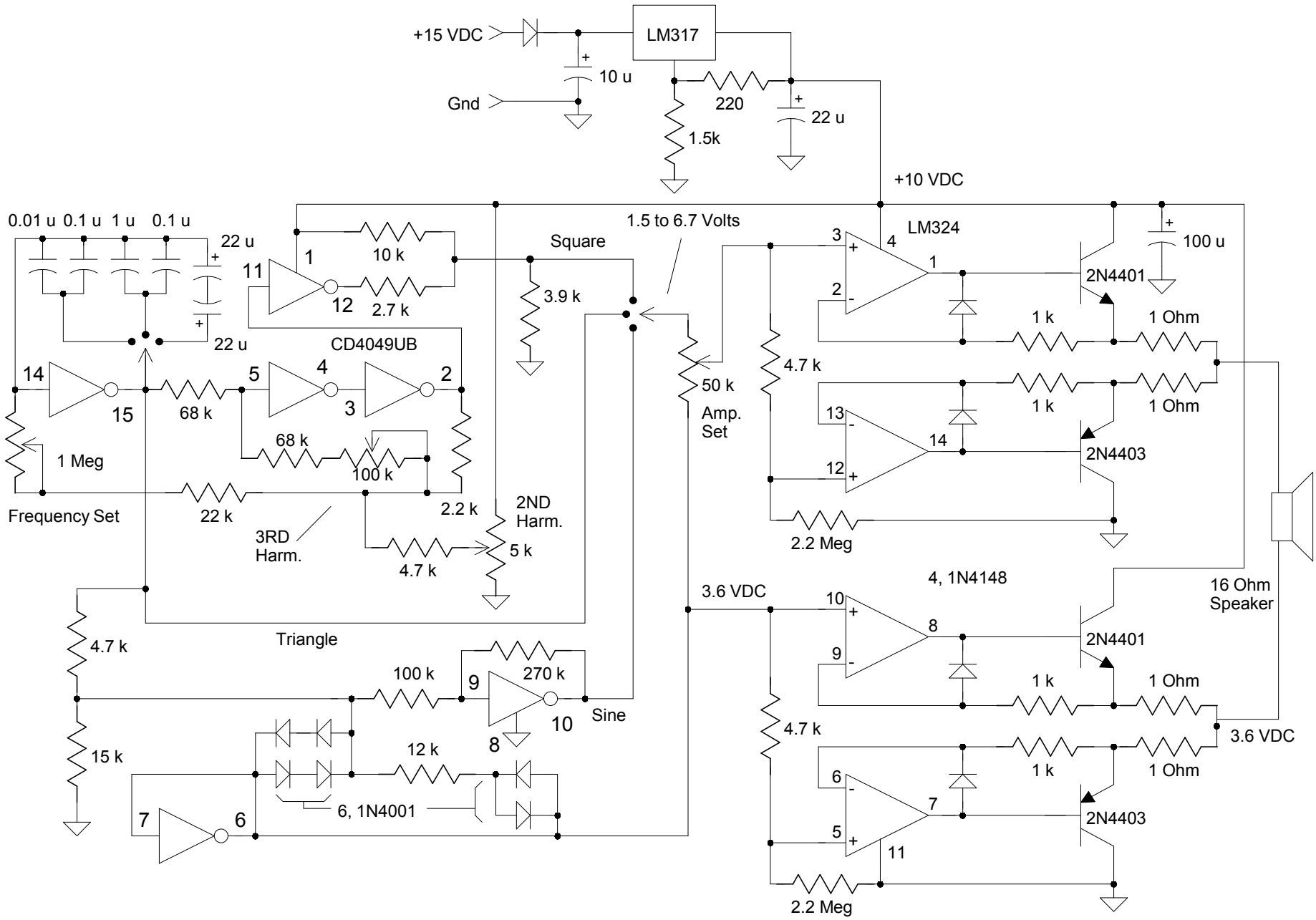
+15 VDC
Gnd
LM317
10 u
220
22 u
1.5k
+10 VDC
0.01 u
0.1 u
1 u
0.1 u
22 u
22 u
10 k
2.7 k
CD4049UB
Square
3.9 k
1.5 to 6.7 Volts
LM324
100 u
2N4401
1 k
1 Ohm
4.7 k
50 k
Amp. Set
2N4403
2.2 Meg
68 k
68 k
100 k
1 Meg
Frequency Set
22 k
2.2 k
3RD Harm.
4.7 k
2ND Harm.
5 k
3.6 VDC
4, 1N4148
16 Ohm Speaker
Triangle
4.7 k
100 k
270 k
Sine
15 k
12 k
6, 1N4001